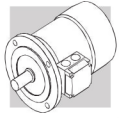

## BE - IM B5

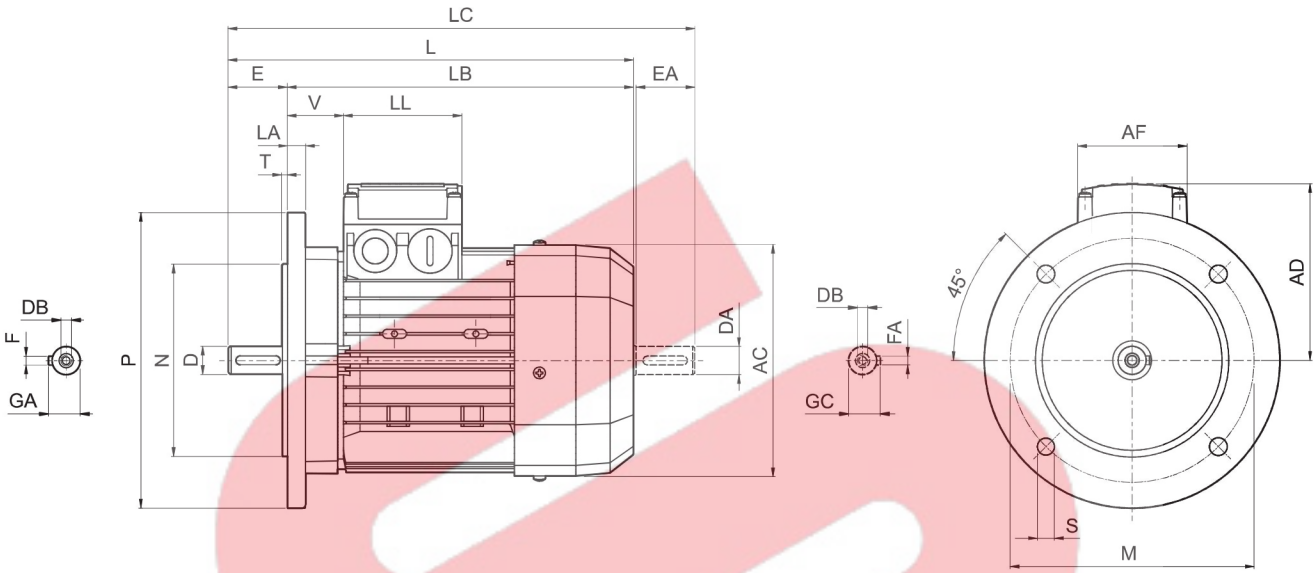


| | Albero / *Shaft* / Welle / *Arbre* | | | | | Flangia / *Flange* / Flansch / *Flange* | | | | | | Motore / *Motor* / Motor / *Moteur* | | | | | | | |
|---|---|---|---|---|---|---|---|---|---|---|---|---|---|---|---|---|---|---|---|
| | **D DA** | **E EA** | **DB** | **GA GC** | **F FA** | **M** | **N** | **P** | **S** | **T** | **LA** | **AC** | **L** | **LB** | **LC** | **AD** | **AF** | **LL** | **V** |
| **BE 80** | 19 | 40 | M6 | 21.5 | 6 | 165 | 130 | 200 | 11.5 | 3.5 | 11.5 | 156 | 274 | 234 | 315 | 119 | 74 | 80 | 38 |
| **BE 90 S** | 24 | 50 | M8 | 27 | 8 | | | | | | | 176 | 326 | 276 | 378 | 133 | 98 | 98 | 44 |
| **BE 90 L** | | | | | | | | | | | | | | | | | | | |
| **BE 100** | 28 | 60 | M10 | 31 | 8 | 215 | 180 | 250 | 14 | 4 | 14 | 195 | 367 | 307 | 429 | 142 | | | 50 |
| **BE 112** | | | | | | | | | | | 15 | 219 | 385 | 325 | 448 | 157 | | | 52 |
| **BE 132 S** | 38 | 80 | M12 | 41 | 10 | 265 | 230 | 300 | | | 16 | 258 | 493 | 413 | 576 | 193 | 118 | 118 | 58 |
| **BE 132 MA** | | | | | | | | | | | | | | | | | | | |
| **BE 132 MB** | | | | | | | | | | | | | 528 | 448 | 611 | | | | |
| **BE 160 M** | 42 38(1) | 110 80(1) | M16 M12(1) | 45 41(1) | 12 10(1) | 300 | 250 | 350 | 18.5 | 5 | 15 | 310 | 596 | 486 | 680 | 245 | 187 | 187 | 51 |
| **BE 160 L** | | | | | | | | | | | | | 640 | 530 | 724 | | | | |
| **BE 180 M** | 48 42(1) | 110 110(1) | M16 M16(1) | 51.5 45(1) | 14 12(1) | | | | | | 18 | 348 | 708 | 598 | 823 | 261 | | | 52 |
| **BE 180 L** | | | | | | | | | | | | | | | | | | | |

NB:
(1) Queste dimensioni sono riferite alla seconda estremità d'albero.

*NOTE:*
*(1) These values refer to the rear shaft end.*

HINWEIS:
(1) Diese Masse betreffen das zweite Wellenende.

*REMARQUE :*
*(1) Ces dimensions se réfèrent à la deuxième extrémité de l'arbre.*